Jennic
TECHNOLOGY FOR A CHANGING WORLD

Product Brief – JN513x

IEEE802.15.4 and ZigBee Wireless Microcontrollers

Overview

The JN513x are a family of low power, low cost wireless microcontrollers suitable for IEEE802.15.4 and ZigBee applications. Each device integrates a 32-bit RISC processor, with a fully compliant 2.4GHz IEEE802.15.4 transceiver, 192kB of ROM, a selection of RAM sizes from 8kB to 96kB, and a rich mixture of analogue and digital peripherals.

The cost-sensitive ROM/RAM architecture supports the storage of system software, including protocol stacks, routing tables and application code/data. Each device integrates hardware MAC and AES encryption accelerators, power saving and timed sleep modes, and mechanisms for security key and program code encryption. These features all make for a highly efficient, low power, single chip wireless microcontroller for battery-powered applications.

Block Diagram

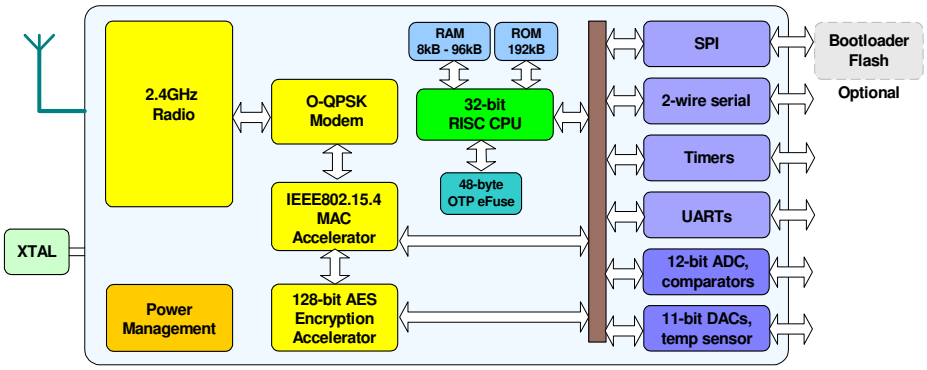

Benefits

- Single chip integrates transceiver and microcontroller for wireless sensor networks
- Cost sensitive ROM/RAM architecture, meets needs for volume application
- System BOM is low in component count and cost
- Hardware MAC ensures low power consumption and low processor overhead
- Extensive user peripherals
- Pin compatible with JN5121 for easy migration

Applications

- Robust and secure low power wireless applications
- Wireless sensor networks, particularly IEEE802.15.4 and ZigBee systems
- Home and commercial building automation
- Remote Controls
- Toys and gaming peripherals
- Industrial systems
- Telemetry and utilities (e.g. AMR)

Features: Transceiver

- 2.4GHz IEEE802.15.4 compliant
- 128-bit AES security processor
- MAC accelerator with packet formatting, CRCs, address check, auto-acks, timers
- Integrated power management and sleep oscillator for low power
- On-chip power regulation for 2.2V to 3.6V battery operation
- Deep sleep current <0.4µA
- Sleep current with active beacon timer <1.5µA
- Needs minimum of external components (< US$1 cost)
- Rx current 39mA
- Tx current 39mA
- Receiver sensitivity -97dBm
- Transmit power +3dBm

Features: Microcontroller

- 32-bit RISC processor sustains 32MIPs with low power
- 192kB ROM stores system code, including protocol stack
- 8kB, 16kB, 32kB or 96kB RAM stores system data and optionally bootloaded program code
- 48-byte OTP eFuse, stores MAC ID on-chip, offers AES based code encryption feature
- 4-input 12-bit ADC, 2 11-bit DACs, 2 comparators
- 2 Application timer/counters, 3 system timers
- 2 UARTs (one for debug)
- SPI port with 5 selects
- 2-wire serial interface
- Up to 21 GPIO

Industrial temperature range (-40℃ to +85℃)

8x8mm 56-lead QFN

Lead-free and RoHS compliant

Design Flexibility

The JN513x family offers lots of flexibility; four pin-compatible devices are available; the JN5131, JN5132, JN5133 and JN5139 that feature RAM sizes of 8kB, 16kB, 32kB and 96kB respectively. Pin-compatibility allows hardware system design to be carried out in advance of understanding software requirements, once these are understood, then the device that offers the optimum RAM footprint may be used to manufacture the lowest cost solution. Devices come packaged in an 8x8mm 56-lead QFN that is JN5121 pin-compatible.

Battery Optimisation

To maximise battery life, devices support a series of power management and sleep modes. Used effectively, these will allow a batteries life expectancy for a typical remote sensing application, to be of the order of a few years.

Power Saving Mode	Current
Deep sleep	<0.4µA
Sleep: wakeup on I/O or timer event	<1.5µA
Sleep: wakeup on I/O or timer event and 96kB RAM retained	<4.0µA

Wireless Protocol Stacks in ROM

Two standard ROM configurations are available that integrate IEEE802.15.4b and ZigBee protocol stacks. The JN513x-000 integrates IEEE802.15.4b for development of proprietary systems, and the JN513x-Z01 integrates the ZigBee protocol stack, this supporting co-ordinator, router and end device configurations. Custom ROM masks will support the integration of user code into ROM, attractive to higher volume applications.

Application Diagram

The JN513x devices require a minimum of external components to support wireless applications; a crystal, some decoupling components and printed antenna are all that is required for the lowest cost bill of materials and smallest size (an external bootloader flash may be used for optional program code storage).

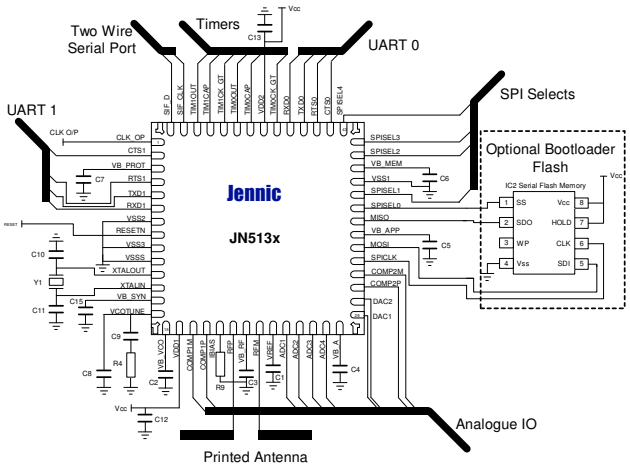

Evaluation Kits

To assist users with the development of wireless sensor networks, Jennic provide a series of Evaluation Kits. These contain everything that is needed to carry out complete development and test, and include controller and sensor boards, interface dongle to connect with a PC and a Software Developer Kit (SDK).

The SDK provides a comprehensive suite of tools to facilitate the development of application code. The kit includes a C compiler, graphical and text debuggers, assembler, linker and flash programmer. A set of libraries provides a simple Application Programming Interface (API) to drive the peripherals of the controller and sensor boards.

Jennic
TECHNOLOGY FOR A CHANGING WORLD

Corporate Headquarters
Furnival Street
Sheffield
S1 4QT
United Kingdom

Tel +44 (0)114 2812655
Fax +44 (0)114 2812951
E-mail info@jennic.com

Taiwan Sales Office
19F-1, 182, Sec.2
Tun Hwa S. Road
Taipei 106
Taiwan

Tel +886 2 2735 7357
Fax +886 2 2739 5687
E-mail info@tw.jennic.com

Japan Sales Office
Osakaya building 4F
1-11-8 Higashigotanda
Shinagawa-ku
Tokyo 141-0022, Japan

Tel +81 3 5449 7501
Fax +81 3 5449 0741
E-mail info@jp.jennic.com

United States Sales Office
1322 Scott Street, Suite 203
Point Loma
CA 92106
USA

Tel +1 619 223 2215
Fax +1 619 223 2081
E-mail info@us.jennic.com